Aerosys Aviation India Pvt Ltd

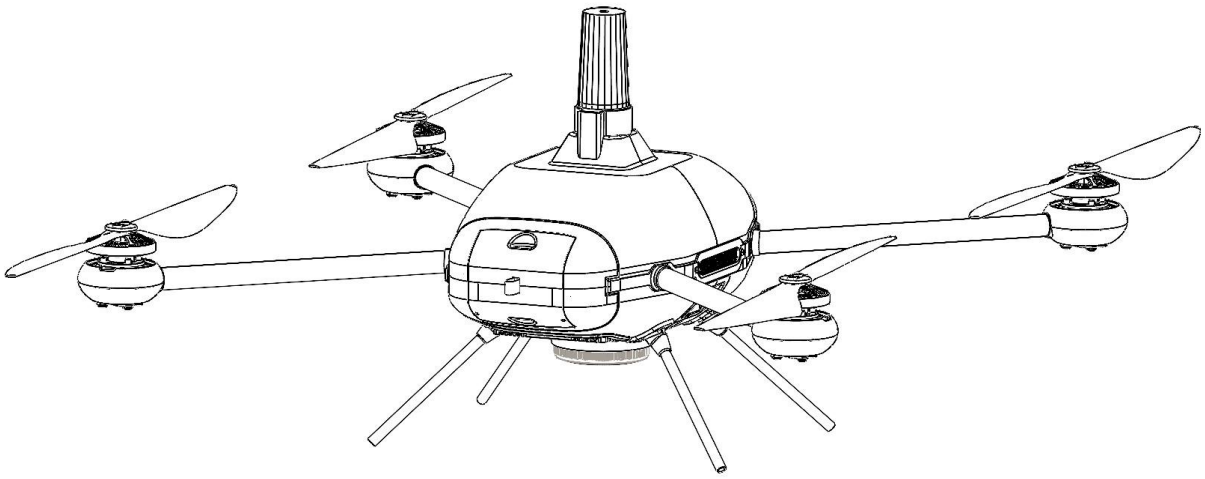

Aerosys Aviation India Pvt. Ltd.
B-103,1st Floor, Sector 6,
Noida, Uttar Pradesh-20130.
Email: info@aerosysaviation.com
+91-9667623314

Maintenance Manual

VEDANSH

Revision History

Version Number	Date	Author/owner	Description of changes
V1.0	19-03-2022	Avinash Kumar	Initial Draft
V2.0	05-08-2022	Avinash kumar	Qground conrol gcs detail has been removed, Added AeroGCS KEA V2.3
V2.1	31-07-2023	Avinash Kumar	Continuous maintenance, specification.
V2.2	24-13-2023	Avinash Kumar	Life of all components updated
V2.3	25-01-2024	Avinash Kumar	Typo correction

Document Name	VEDANSH Maintenance Manual
Document Number	7
Created By	Avinash Kumar(avinash@aerosysaviation.com)
Reviewed By	Sethu Raj V(research@aerosysaviation.com)
Verified By	Sethu Raj V

AEROSYS AVIATION INDIA

Contents

1 Introduction 5
2 System Maintenance 6
2.1 Airframe Maintenance 8
2.2 Camera Maintenance 9
2.3 Motor & Propeller 9
2.4 Antenna 9
2.5 Calibration 9
2.5.1 Compass Calibration 9
2.5.2 Accel Calibration 10
2.6 Battery 11
2.6.1 Battery Charging & Storage` 11
2.6.2 Charging 12
2.6.3 Storing the Batteries 12
2.7 Software Maintenance 12
2.7.1 Firmware 12
2.7.2 Ground Control Station 12
2.7.3 SD Cards 13
2.7.4 Logs 13
2.7.5 Rover Logs 13
2.7.6 Telemetry Log 13
2.7.7 Flight Log 13
2.7.8 User Log Book 14
2.8 Operational Log Book Template 14
2.9 Continuous Monitoring Process 14
2.9.1 Airframe 15
2.9.2 Camera 15
2.9.3 Motor & Propeller 15
2.9.4 Battery 15

2.10 Preventive Maintenance 16
2.10.1 After every flight 16
2.10.2 After 50 Flights 16
2.10.3 After 200 Flights 17

1 Introduction

The Best way to get the maximum out of every machine is the timely maintenance of the system in a very specific manner. A flying system is twice as important to be taken care of as things that can go wrong in the sky will not end well. The preventive and scheduled maintenance are the most important and implemented way of maintaining the UAV.

This Document explains the correct procedure to maintain Vedansh UAV and always have a happy flight.

2 System Maintenance

The Most important and usually prone to error/ potentially affect the safety of the flight are given below. The correct procedure to check/correct these are also explained

1.Airframe maintenance
2.Camera Maintenance
3.Motor & Propeller
4.Antenas
5.System Sensor Calibration
6.Battery
7.GCS: AERO GCS KEA V2.3

The UAV contains the Airframe, Payload, Motors, Propellers, Avionics, PPK GPS & Other Sensors

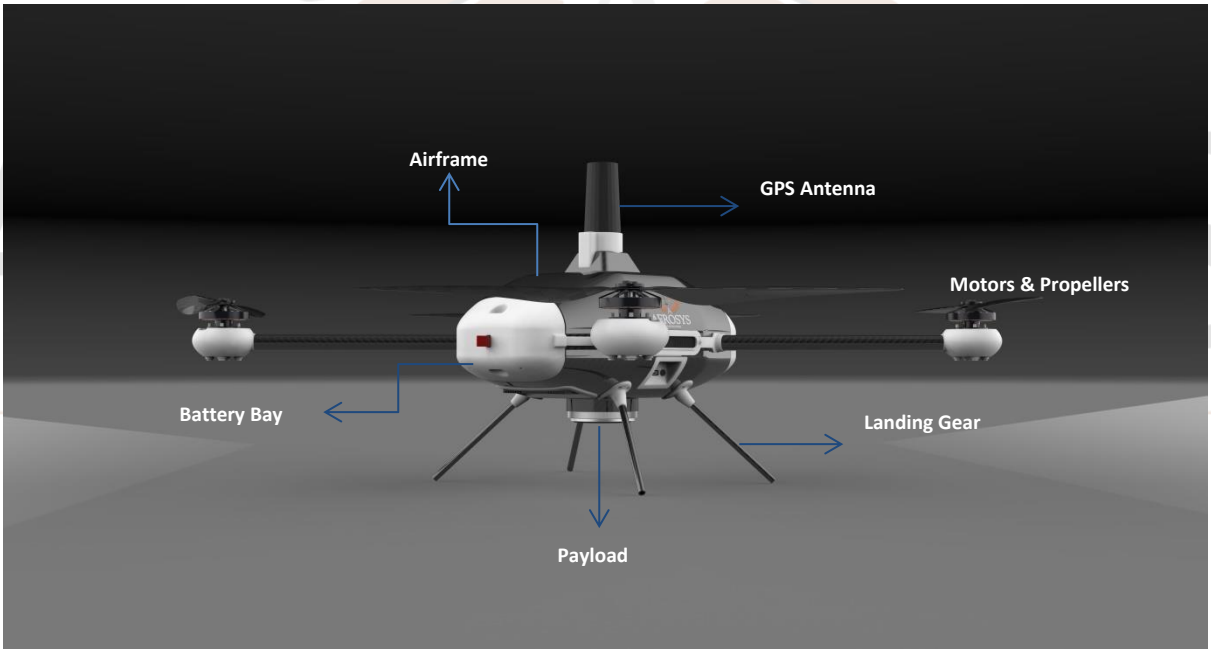

Specification of the UAV:

1.	**Physical Characteristics**	**Specification**
a.	UAS Type	Multi-rotor.

b.	Maximum Take-off weight (with	<=2.15kg

	battery & payload)	
c.	Feature	surveying mapping/professional grade
2.	**UAV Performance Characteristics**	**Specification/Remarks**
a	Endurance	40min+.
b.	Communication Range	3km (visual line of sight)
c.	GNSS Grade (Compatible	PPK Enabled with GNSS base station (GNSS station of L1 and L2 frequency)
d.	Maximum operating altitude	Maximum 120m AGL (above ground level)
e.	temperature rang	0 to 50 deg.
f.	Operational Wind Speed	Up to 8m/s for safer side
3.	**Operational characteristics**	**Specifications**
a.	Launch & Recovery	Autonomous Vertical Take-Off & Landing (VTOL)
b.	Flight Modes	● Fully autonomous from Take-off to Landing without using any R/C controller ● Altitude Hold. ● POS Hold

c.	Failsafe features	• Return to Home on communication failure • Return to Home/Land on low battery • GPS failure redundancy
d.	Packing and storage	• Carrying case provided by OEM. • When you're storing it for a long time, remove the propeller. • Charge the battery to the nominal Voltage and keep it in a safe place.
4.	**Payload characteristics**	**Specification**
a	Payload	High Resolution RGB sensor 24 MP
5.		**Specification**
a.	Communication link	• Transmit control commands from GCS to UAV • Transmit telemetry data from UAV to GCS
b.	Frequency band	2.4GHZ

2.1 Airframe Maintenance

The Airframe is made of Carbon fibre and is rugged enough to withstand the loads within the flight envelope defined in the operational manual. Before every flight, it is important to check the airframe for cracks or damage though. Thoroughly inspect the airframe and canopy for any scratch, crack, or damage. If any damage is found, immediately contact the OEM Team for support. To protect

the exterior and prevent the dust from settling, clean the outer parts of the airframe lightly with a microfibre cloth.

2.2 Camera Maintenance

The Camera features a lens and the Optical sensor. The only part that is exposed is the lens and the lens cannot be separated from the camera. Always use the lens cap provided to cover the camera when the drone is not flying. And before every flight, clean the lens with a soft lens cleaning microfiber cloth (or spectacle cleaning cloth) to remove the dust from the lens surface. It is very important to clean the lens using proper cloth only in order to prevent scratches. The camera was supposed to trigger once within the 5 to 8 sec after the battery had been plugged in. In case there is no triggering sound even after 15 seconds once the battery plugs in contact OEM Team for support.

2.3 Motor & Propeller

Clean the motor bell with an air compressor or air blower after every 10 flights or after landing in a dusty area. Always Use the landing pad given along with the kit to avoid dust settling into the system. The Motors must be checked by rotation with hand before every flight and they should rotate freely. If there is any obstruction, clean the motor bell. Similarly, the propellers must be checked for any abrasion or damage and must be cleaned with a soft cloth regularly. After every flight the propellers must be covered with the protective cover provided.

2.4 Antenna

The Helical Antenna should be checked before every flight for any potential damage. If found to be loose or damaged please contact the OEM team for support.

2.5 Calibration

The sensor calibration can be performed by connecting the drone to the GCS software and going to the Sensor calibration page. Please read the operational manual for more information.

2.5.1 Compass Calibration

Compass calibration is best performed outside, away from metallic objects, and electrical or magnetic interference.

To start the compass calibration, go to the ‘Settings’ section of the GCS GCS, then the sensor button, and then click the ‘Compass Calibration'.

The calibration process starts after clicking the “START” button. The autopilot orientation parameter in the GCS should remain unchanged.

A compass calibration involves rotating the vehicle 3 times over all the axes. This calibration step can be performed by hand. The battery must be inserted properly and make sure it's locked in place. Perform the calibration task until the progress bar is completed. After completion, a progress bar will come. Ensure that the dot is in the GREEN section. If not, perform the calibration again. Once completed, reboot the vehicle.

The DRONE requires compass calibration in the following conditions:

When transported over 300 km from its previously calibrated location. When the telemetry readings are inconsistent with reality.

When there is an error message of “Compass Inconsistent” When the compass health during the flight goes red in colour.

2.5.2 Accel Calibration

Accelerometer calibration is best performed on a level and flat plane. To start the accel calibration, go to the ‘Settings’ section of the GCS, then the sensor button, and then click the ‘Accel Calibration'. The calibration process starts after clicking. The autopilot orientation parameter in the GCS should remain unchanged. The system will show to orient the aircraft in various directions and press next when done. This calibration step can be performed by hand. The canopy should be closed and the Li-Ion battery and any additional payload should be inserted and securely fastened. Reboot the vehicle after the calibration is successful. The DRONE requires compass calibration in the following conditions:

When the telemetry readings are inconsistent with reality.

When there is an error message of “Accels Inconsistent”

2.6 Battery

Lithium-ion battery packs of 6 Cell and 3500 mah (2 packs of 3500 mah) are used in the UAV. Lithium batteries are manufactured using six 3.7 volts (nominal volt) 3500 mah lithium-ion cells connected in series.

Charging instruction is described in the flight Manual.

2.6.1 Battery Charging & Storage`

Use only the charger provided with the kit to charge the Battery packs. The exact program to be chosen to charge the battery is described in the operation manual.

Never charge batteries unattended unless you charge inside a Li-Ion Safe. When charging Li-Ion batteries you should always remain in constant observation to monitor the charging process and react to potential problems that may occur.

If at any time you witness a battery starting to balloon or swell up, discontinue the charging process immediately. Disconnect the battery and dispose of it safely. Continuing to charge a battery that has begun to swell will result in fire. Likewise, never use a battery if you find it swollen or ballooned.

Wire lead shorts can cause a fire! If you accidentally short the wires, the battery must be placed in a safe area for observation for at least 1 hour. Additionally, if a short occurs and contact is made with metal (such as rings on your hand), severe injuries may occur due to the spark or the heat produced.

Since delayed chemical reactions can occur, it is best to observe the battery as a safety precaution. Battery observation should occur in a safe area outside of any building or vehicle and away from any combustible material. A battery can still ignite even after 1 hour.

A battery that makes a hissing sound is almost certain to ignite. Consider your own safety and that of your environment before attempting any action.

In the event of a crash, you must remove the battery and dispose of it safely or contact the OEM before using it again.

2.6.2 Charging

Follow proper charging procedures as mentioned in the operations manual. Only use the recommended charger.

If the Battery Charger shows an error “CELL ERROR” contact the OEM Team for support.

Never charge batteries unattended unless you can charge them inside a LiIon safe.

Charge in an isolated area, away from other flammable materials.

Let the battery cool down to ambient temperature before charging.

Never charge the battery at more than 3 Amperes, as this will reduce the number of charge cycles and efficiency of the battery.

Charge the batteries in a cool and ventilated place. Do not keep it inside a closed car for charging.

2.6.3 Storing the Batteries

When storing a Li-Ion Battery for a period longer than 1 week, make sure to store it at approximately 50% charge. This will increase the lifetime of your battery. The Battery should be stored in a safe and dark location between 5 and 25 degrees Celsius and never left exposed to direct sunlight for a prolonged period of time.

2.7 Software Maintenance

2.7.1 Firmware

The DRONE Runs on custom firmware. The firmware is tamperproof. The ground control station will check for any software upgrades and will download it from the manufacturer software centre automatically. In case of any specific updates, the Company Team will contact the user and coordinate.

2.7.2 Ground Control Station

The current GCS version is AEROGCS KEA V2.3. The GCS will always check for new updates automatically and notification for the same will be displayed to the user on GCS. In case of any issues or manual updates, please follow the below steps:

Go to the Installation directory (normally C:/Program files (x86)/)
Open Maintenancetool.exe
You can repair, update or uninstall the software from the onscreen options.
In case of an update, the tool will check for any updates and notify the same.

2.7.3 SD Cards

The camera memory card can't be accessed by the user, the data collection and deleting the same is done through the Micro USB port at the left side of the UAV

Rover's internal memory can be formatted within the PC.

Camera cards can be formatted within the camera under the settings menu of the camera. In case of any error in the camera . Contact OEM support team.

2.7.4 Logs

There are the following types of logs generated with the System.

2.7.5 Rover Logs

The Rover logs the GNSS PPK logs which are required to analyse the GNSS positioning data of the flight and during the PPK Post-processing & Geotagging procedure which can be directly accessed and downloaded through wifi.

2.7.6 Telemetry Log

These are the logs stored under the Documents folder/ GCS. These are telemetry logs that are generated by GCS software. These logs are created by the name as per the date and time of flight. In case of any incident or malfunction, send these logs to the OEM support team.

2.7.7 Flight Log

The DRONE records onboard logs that contain a vast amount of information regarding the flights. These onboard logs are stored within the autopilot. This may be demanded by the team in case any higher escalation is required.

2.7.8 User Log Book

Another log book for the user is available on the GCS which can be accessed by clicking the log button in the menu. This log contains the details of the flight, its location, and its operator. This will help users to maintain an internal record. Apart from this, the user should maintain a physical logbook with the following sample entry:

2.8 Operational Log Book Template

Sl. No	Pilot Name	Drone UIN number	Date	Time	Weather/ Wind	Location	Mission/ KML No.	Flight Time	Pre-flight Checklist No.	Comments

Maintenance LogBook Template

Sl. No	Drone OEM serial Number	Maintenance Date	Flight Count	Maintenance Report No.	Performed By	Description of Maintenance	Date Of Hand Over	Next date of Maintenance

1

AEROSYS AVIATION INDIA

2.9 Continuous Monitoring Process

The following section guides the monitoring and observational key point for different components of the system. In case of any issues, go through the maintenance procedures of that particular component.

2.9.1 Airframe

After every flight, visually check the Airframe, Battery Bay, Battery lock, Canopy and Landing gear for any scratch, crack, or damage.

Physically check the stiffness of the Landing gear, arms, and motor mounts by shaking and applying light pressure.

Check if the Battery connectors are free from dust/damage.

2.9.2 Camera

Before every flight, check the camera mounts,lens and antenna. They should be properly tightened.

Check the camera lens for any scratches or dust particles and clean it.

Check the exposed Micro USB connectors on the left side of the UAV are intact and free from dust.

2.9.3 Motor & Propeller

- Before every flight, check the motors if they are rotating freely without any obstructions.
- Check if the motors are mounted rigidly on the Airframe.
- Check if the propellers are tight and mounted securely on the motor.
- Check whether the motor winding is free of any dust or foreign particle.
- Check the propeller for any abrasion or wear and tear.
- Check the propeller stiffness by applying light pressure.

2.9.4 Battery

Before using the batteries, check for any physical damage or deformation.

Check the smell, charging/discharging time, and temperature of the battery.

Check the Battery with the cell checker and check the voltage of every cell.

Check the Balance cable and the Power connector for any damage, cut, or is loose.

NOTE: Client has to provide the 5 latest flight log after every 50 flight to check all the parameters & performance of the UAV.

AEROSYS
AVIATION INDIA

2.10 Preventive Maintenance

To keep your DRONE in proper condition the following steps should be taken:

2.10.1 After every flight

- Check the Airframe, Camera, Motors, Propellers, and Batteries as per the above section.
- Maintain the log book as per the above template.

2.10.2 After 50 Flights

- Check the propellers and replace them in case of inconsistency.
- Add bearing oil to the motor bearings. Thread locker must be used on all screws when reattaching.
- Perform compass calibration.
- COPY and DELETE the content of the memory card to other devices and keep the Card empty **(Do Not Format the Memory card)**
- Deep clean the motor stator with an air compressor or Rubber blower.

2.10.3 After 200 Flights

- To keep your aircraft in the best condition and safe to operate beyond this point scheduled maintenance should be performed. This entails the preventive replacement of many components and a thorough inspection and test flight.
- It is advisable to send the product for inspection and servicing to the manufacturers service centre after 200 flights.

Note: The following table contains the recommended life of components:

Airframe life	462.4 Hours
Battery	204 Cycles
Landing	694 landings
Motor	500 hrs
Propeller	500 hrs

1.7 Scheduled Maintenance

The recommended service cycle for the DRONE is 200 flights or 4 months, whichever comes first. Vehicles flown beyond the recommended maintenance cycles void their warranty.

Note: Performing Self-Service Maintenance does not extend your warranty. A high technical level is required to perform scheduled maintenance.

In case of any queries or emergency support requirements, contact the Company Team.

Support: kindly reach us at: support@aerosysaviation.com
Call us: +91-8210160548

1.7.2 Maintenance Chart:

Details	30 days	60 days	6 months	1 years
Airframe				
Motor				
Propeller				
Payload				
Bttery cycle				

AEROSYS
AVIATION INDIA